FALSE CEILING TRIM KIT
MAJOR PRO-C

The **FALSE CEILING TRIM KIT** for **MAJOR PRO-C** screens is an accessory that enables to hide the large cabinet of a Major Pro-C inside a false ceiling.
This kit is made of aluminium entirely powder coated in white colour (RAL 9010).
IMPORTANT: The TRIM KIT has to be ordered together with the Major Pro-C (cannot be retrofitted).

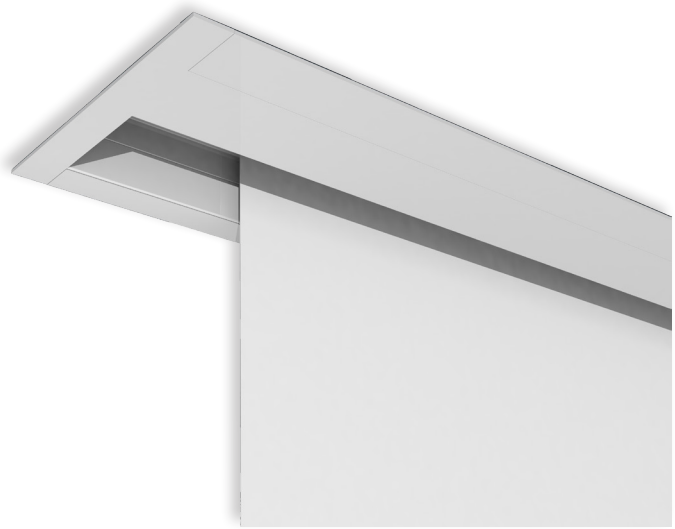

CEILING MOUNTING BRACKET

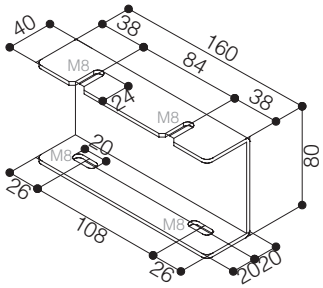

FALSE CEILING TRIM KIT FOR MAJOR PRO-C

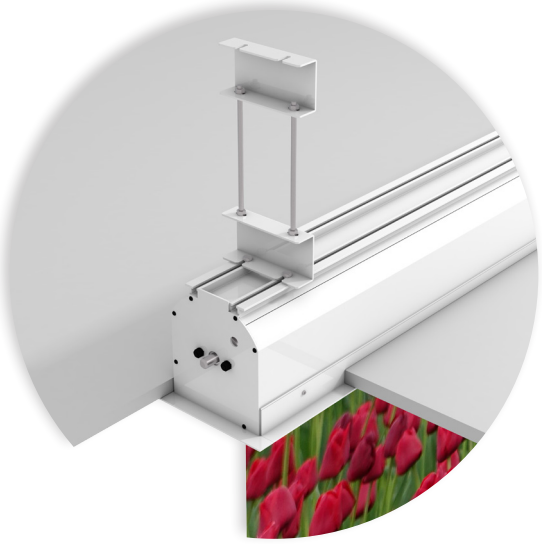

Left Side View

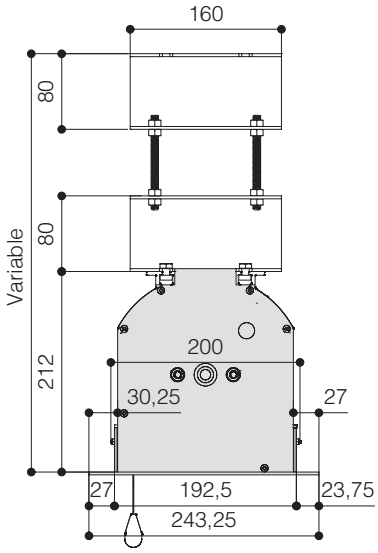

Left Front View

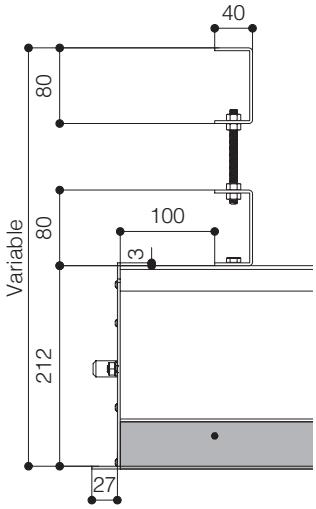

MOUNTING DISTANCES OF BRACKETS

Major Pro-C 500 - 600 cm. of width

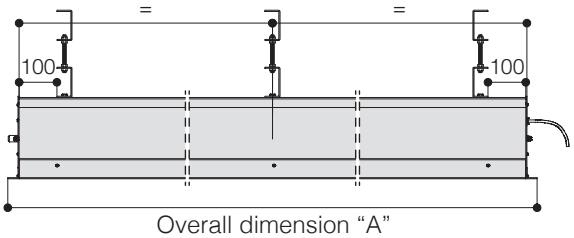

Overall dimension "A"

Major Pro-C 700 cm. of width

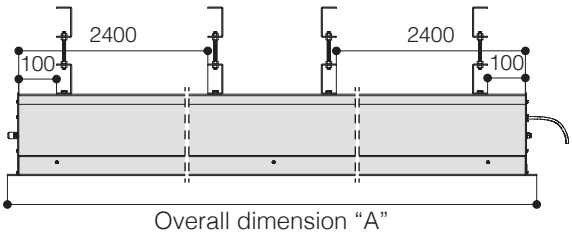

Overall dimension "A"

Width of the hole to be made in the false ceiling: **22 cm**.

LENGHT OF HOLE IN FALSE CEILING	
Major Pro-C without borders	Width of viewing area + 22 cm
Major Pro-C with borders	Width of viewing area + 32 cm
Major Pro-C Tensioned	Width of viewing area + 72 cm

HOUSING OVERALL DIMENSIONS

MODEL		OVERALL DIMENSIONS "A"
Major Pro-C Major Pro-C Tensioned	500 cm. 450 cm.	524,5 cm
Major Pro-C Major Pro-C Tensioned	600 cm. 550 cm.	624,5 cm
Major Pro-C Major Pro-C Tensioned	700 cm. 650 cm.	724,5 cm

The measures in the drawings are expressed in millimetres.

Warranty: 24 months